Standard-Level Analytical/Precision Balances

A&D Fortis

FZ(-WP)/FX(-WP) Series



0.01 g models



0.001 g models



0.0001 g models

ISO 9000 CERTIFIED

Pay for What Matters—
Reliable, Accurate Weighing

A&D Company, Ltd.

Discover Precision

www.aandd.jp

Uncompromising Performance, Incredible Value

A&D Fortis is the perfect balance of quality and price. Built upon A&D's acclaimed Super Hybrid Sensor (SHS) technology, it combines precision with efficiency, delivering streamlined operations in a compact footprint without any frills. Each feature is carefully designed to enhance usability and reliability, ensuring dependable results every time.

Compact, powerful workhorse for research and industrial applications

Space-saving, fast-weighing Compact Super Hybrid Sensor (C-SHS)

By increasing the lever ratio, the C-SHS is made 45% smaller in volume than A&D's original SHS. With the C-SHS, the footprints of the balances are smaller than the ISO A4 (210 mm × 297 mm) paper size, maximizing opportunities for use in even the smallest of spaces, including those in in-line systems.

Meanwhile, a combination of a high-stiffness, Roberval-structure spring material and an electromagnetic force restoration mechanism simultaneously realizes fast stabilization and high resolution for efficient, precise weighing. Typical stabilization time is **1 second for 0.001/0.01 g models.**

Large breeze break with rotary sliding doors (for 0.0001 g models)

Unlike conventional analytical balances, A&D Fortis requires no extra space at the rear for accessing the weighing chamber, as the doors simply rotate behind the balance. Moreover, the breeze break can be easily removed from the balance using a unique clip system, allowing fast, simple cleaning as well as use in confined spaces such as gloveboxes and controlled environment cabinets.



Rotary sliding doors



Easily-removable breeze break

The plastic of the breeze break is coated with an antistatic agent to block outside static electricity to ensure stable weighing. It is also shatter-resistant and meets glass-free requirements for food/drug production lines.

Consistent and steadfast performance, even in demanding conditions

IP65 dust and waterproof (FZ-WP/FX-WP)

The FZ-WP/FX-WP series, which are IP65-rated, permit no ingress of dust, and can withstand water projected from any direction, as defined by the IEC/EN standard 60529. This makes the balance highly suitable for work with liquid or powder materials, or use in dusty/wet environments, with no need to worry about damaging it.



Guarded against accidental overloading

A&D's unique internal overload protection mechanism*1 guards the C-SHS from the adverse effects of static overloading due to, for example, a weighing system's actuator malfunction and resulting load exceedance, or a user inadvertently putting a heavy burden on the weighing pan.

*1 Not designed to handle impact loads

Impact shock detection (ISD)

Impact-Alert

Impact loads typically occur in factories where objects are placed down roughly by machines or thrown onto balances by operators. A&D Fortis detects shocks to the weight sensor caused by such impact loads and indicates their magnitudes in five levels from 0 to 4 (with beep sounds for Level 3 and Level 4, both of which are detrimental to the balance).





No impact shock | Level 1 | Level 2 | Level 3 | Level 4

By using this function and taking appropriate preventive/protective measures, you can avoid variations in weighing values due to shocks and the risk of eventual weight sensor failure.

Shock-Log

For inspection after use, A&D Fortis also logs up to 50 impacts of Level 3 and Level 4 (with timestamps for the FZ/FZ-WP series) while the power is on. Data will then be overwritten in order from the weakest impact.

Simplified management for unwavering accuracy

Air-pump controlled internal weight for sensitivity adjustment (FZ/FZ-WP)

For the internal sensitivity adjustment of the FZ/FZ-WP series, A&D adopted a direct-driving method with a balloon-like actuator that utilizes air pressure for its power source. It features a simple structure, high reliability and a fail-safe mechanism—the internal weight returns to the original position even if the adjustment is interrupted by power failure, etc.

One-touch sensitivity adjustment (FZ/FZ-WP)

With just one key press, the balance loads and unloads the internal weight to correct inaccuracy quickly by itself. This is useful for daily management of the balance performance, for situations where the installation location changes often, or for instances when the ambient temperature variation is large, etc.

Internal weight value correction (FZ/FZ-WP)

In cases such as where the internal weight value varies over time, it can be corrected either by loading an external reference weight or by manually inputting a correction value.

Versatile connectivity methods available to suit your needs

RS-232C (D-Sub 9-pin) interface as standard on all models

Bi-directional serial communication (i.e. sending data and receiving commands) with an external device, such as a printer or PLC, can be made via this interface. For the FZ-WP/FX-WP series, a 5-meter waterproof RS-232C cable (AX-KO2737-500) can be purchased separately.

USB interface (FX-05, optional)

The USB interface can be toggled between Quick USB mode (plug-and-play with weighing data output to a PC only) and Virtual COM mode (for bi-directional communication*[2]). A USB cable (1.8 m) is supplied as standard*[3].

*2 Installation of dedicated driver software is required for Windows 8.1 or earlier.

*3 The FZ-WP/FX-WP series are still IP65 when the provided USB cable is connected to the USB interface

Ethernet (TCP/IP) interface (FXi-08, optional)

The Ethernet (TCP/IP) interface is suitable for connecting multiple balances to a PC via an Ethernet hub (to be prepared by users)*[4]. The WinCT-Plus software, which can be used to acquire data from and send commands to those balances, is also provided for free.

*4 The FZ-WP/FX-WP series are not IP65 with FXi-08.

Bluetooth® interface (GXA-27, optional)

The Bluetooth interface realizes wireless communication between the balance and a Bluetooth-enabled device, such as PC, smartphone, or tablet computer*[5]. For smartphones/tablet computers, a communication app “A&D WeiV” is available as a free download.

*5 Please contact your local A&D representative to find out whether GXA-27 is certified for compliance with Bluetooth communication laws in your country.

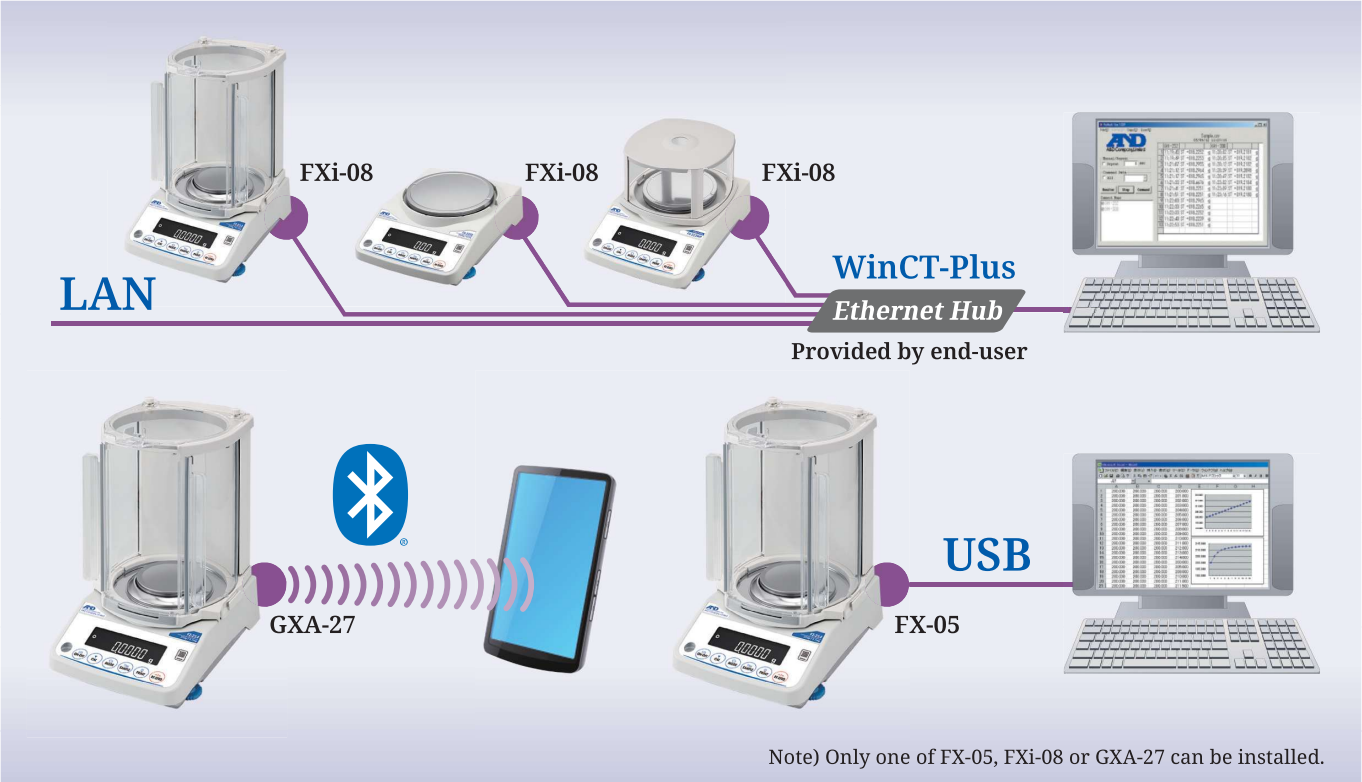

Streamlined solutions for data handling and compliance

GLP/GMP/GCP/ISO-compliant output

For documentation requirements, the balance manufacturer, model, serial number, ID number (seven alphanumeric characters set by the user), date + time*6, space for signature for sensitivity adjustment report, calibration test report, and title & end blocks for a series of weighing results can be output.

*6 Only the FZ/FZ-WP series can output date + time. For the other series in the A&D Fortis family, please use the clock and calendar function of an external device such as the AD-8129TH compact thermal printer.

Statistical calculation function (SCF)

Various statistical data can be calculated and displayed/output to help analyze measurement results. This function is also useful for recording the formulation results of multiple ingredients.

User access control (UAC) and key lock

A&D Fortis can be password-protected in two ways: The first way is to limit use to authorized individuals (up to 11 including one administrator—the administrator can perform all operations while other users are limited to measurements and sensitivity adjustments*7 only) by setting a password for each user. The second way is to set a password for just the administrator, allowing anyone else to use the balance without entering a password, but for measurements and sensitivity adjustments*7 only.

Meanwhile, upon receiving a command to disable its keys, the balance becomes operable only by sending commands from an external device, such as a PC. Alternatively, it is also possible to disable designated keys only (so as to avoid unnecessary/incorrect operations, etc.).

*7 The administrator can also restrict sensitivity adjustment so that others can perform measurements only.

Additional features to enhance various weighing applications

- ✔ Adjustable response characteristics to optimize performance under the given environmental condition (e.g. draft, vibration, etc.)
- ✔ Clearly visible, reverse-backlit LCD (main character height: 16 mm)
- ✔ Counting mode with Automatic Counting Accuracy Improvement (ACAI)
- ✔ Density determination function for automatic density calculation (a separately-sold density determination kit, AD-1654, is also available)
- ✔ Underhook for weighing by hanging
- ✔ Multiple units of measure: g, mg*[8], oz, lb*[9], lb-oz*[9], ozt, ct, mom, dwt, gr, pcs (counting mode), % (percent mode), DS (density mode), in addition to a user-programmable unit for conversion applications*[10]
- ✔ Comparator mode with buzzer for intuitive, error-free check weighing
- ✔ Percent mode useful for target weighing or checking sample variation
- ✔ Animal weighing (average & hold) function for weighing moving objects
- ✔ Capacity indicator that lets you know the remaining capacity of the balance
- ✔ Optional built-in rechargeable battery (FXi-09) available*[11]

*8 For 0.0001 g models only

*9 For 0.001/0.01 g models only.

*10 One additional unit from either tael (Singapore/HK jewelry/Taiwan/China), tola or Newton can be added upon request.

*11 14 hours of charging for 8 hours of continuous operation (the balance cannot be used while recharging the battery at the same time)

Options

FX-05*[12]	USB interface with cable	FX-11	Large breeze break
FXi-08*[12]*[13]	Ethernet (TCP/IP) interface	FXi-12	Animal weighing pan (for 0.01 g models)
FXi-09*[12]*[13]	Built-in rechargeable battery	FXi-15	Carrying case (for 0.001/0.01 g models)
FX-10	Small breeze break	GXA-27*[12]	Bluetooth® interface

*12 Only one of FX-05, FXi-08, GXA-27, or FXi-09 can be installed.

*13 The FZ-WP/FX-WP series are not IP65 with FXi-08 or FXi-09.

Accessories

AD-1654	Density determination kit	AD-8541-PC	Bluetooth® dongle for PC
AD-1683A	Static eliminator	AD-8552EIP	RS-232C to EtherNet/IP converter
AD-1684A	Electrostatic field meter	AD-8920A	Remote display
AD-1687	Weighing environment logger	AD-8922A	Remote controller
AD-1688	Weighing data logger	AD-8923-CC	Remote controller (CC-Link)
AD-1689	Tweezers for calibration weight	AD-8923-BCD	Remote controller (BCD)
AD-8129TH	Compact thermal printer	AX-FXi-31	Main unit cover (5 pcs)
AD-8526	RS-232C/Ethernet (TCP/IP) converter	AX-KO2737-500	Waterproof RS-232C cable (5 m)
AD-8527	Quick USB adapter	AX-USB-9P	RS-232C/USB converter with cable

Specifications

Models		FZ-104 FX-104	FZ-154 FX-154	FZ-254 FX-254	FZ-254D FX-254D
Capacity		102 g	152 g	252 g	62 g / 252 g*i
Readability		0.0001 g			0.0001 g / 0.001 g*i
Repeatability (standard deviation)*ii		0.0001 g		0 to 200 g: 0.0001 g 200 to 250 g: 0.0002 g	0.0001 g / 0.0005 g
Minimum weight*iii (typical)		140 mg			
Linearity		±0.0002 g		±0.0003 g	±0.0003 g / ±0.001 g
Stabilization time (typical when set to FAST)		Approx. 2 secs			
Sensitivity drift		±2 ppm/°C (10 to 30 °C/50 to 86 °F)			
Operating environment		5 to 40 °C (41 to 104 °F), 85 %RH or less (no condensation)			
Display refresh rate		5 times/sec, 10 times/sec or 20 times/sec			
Units of measure*iv		mg (milligram), g (gram), oz (ounce), ozt (troy ounce), ct (metric carat), mom (momme), dwt (pennyweight), gr (grain), pcs (counting mode), % (percent mode), DS (density mode), and a user-programmable unit			
Counting mode	Minimum unit mass	0.0001 g			0.001 g
	Number of samples	5, 10, 25, 50 or 100 pieces			
Percent mode	Minimum 100% reference mass	0.0100 g			0.100 g
	% readability	0.01%, 0.1% or 1% (depends on the reference mass stored)			
Standard communication interface		RS-232C (D-Sub 9-pin)			
Internal sensitivity adjustment method		Air-pump controlled, direct-driving method (for FZ only)			
Applicable weight value for sensitivity adjustment		50 g 100 g	50 g 100 g 150 g	50 g 100 g 200 g 250 g	20 g 50 g 100 g 200 g 250 g
Weighing pan size		Ø90 mm			
External dimensions		198 (W) × 294 (D) × 315 (H) mm (with the large breeze break)			
Net weight		FZ: approx. 3.9 kg | FX: approx. 3.5 kg			
Power supply / consumption		AC adapter / approx. 30 VA			
Standard accessories		Large breeze break × 1, Main unit cover × 1, AC adapter × 1			

Models		FZ-123 FX-123 FZ-123WP FX-123WP	FZ-223 FX-223 FZ-223WP FX-223WP	FZ-323 FX-323 FZ-323WP FX-323WP	FZ-523 FX-523	FZ-1202 FX-1202 FZ-1202WP FX-1202WP	FZ-2202 FX-2202 FZ-2202WP FX-2202WP	FZ-3202 FX-3202 FZ-3202WP FX-3202WP	FZ-5202 FX-5202
Capacity		122 g	220 g	320 g	520 g	1220 g	2200 g	3200 g	5200 g
Readability		0.001 g				0.01 g			
Repeatability (standard deviation)*ii		0.001 g				0.01 g			
Minimum weight*iii (typical)		FZ/FX: 1.4 g | FZ-WP/FX-WP: 1.8 g				FZ/FX: 14 g | FZ-WP/FX-WP: 18 g			
Linearity		±0.002 g				±0.02 g			
Stabilization time (typical when set to FAST)		Approx. 1 sec							
Sensitivity drift		±2 ppm/°C (10 to 30 °C/50 to 86 °F)							
Operating environment		5 to 40 °C (41 to 104 °F), 85 %RH or less (no condensation)							
Display refresh rate		5 times/sec, 10 times/sec or 20 times/sec							
Units of measure*iv		g (gram), oz (ounce), lb (pound), lb-oz (pound-ounce), ozt (troy ounce), ct (metric carat), mom (momme), dwt (pennyweight), gr (grain), pcs (counting mode), % (percent mode), DS (density mode), and a user-programmable unit							
Counting mode	Minimum unit mass	0.001 g				0.01 g			
	Number of samples	5, 10, 25, 50 or 100 pieces							
Percent mode	Minimum 100% reference mass	0.100 g				1.00 g			
	% readability	0.01%, 0.1% or 1% (depends on the reference mass stored)							
Standard communication interface		RS-232C (D-Sub 9-pin)							
Applicable weight value for sensitivity adjustment		50 g 100 g	50 g 100 g 200 g	50 g 100 g 200 g 300 g	50 g 100 g (100 g interval) 500 g	500 g 1000 g	500 g 1000 g 2000 g	500 g 1000 g 2000 g 3000 g	500 g 1000 g (1000 g interval) 5000 g
Weighing pan size		Ø130 mm				Ø150 mm			
External dimensions		193 (W) × 262.5 (D) × 85.5 (H) mm | 193 (W) × 262.5 (D) × 176 (H) mm (with the small breeze break)							
Net weight		FZ: approx. 3.0 kg | FX: approx. 2.5 kg | FZ-WP: approx. 3.2 kg | FX-WP: approx. 2.7 kg							
Dust and waterproof rating		IP65 (for FZ-WP/FX-WP only)							
Power supply / consumption		AC adapter / approx. 30 VA							
Standard accessories		Small breeze break × 1*v, Main unit cover × 1, AC adapter × 1							

***i** Smart range function: Automatically switches between the precision and standard ranges, and recovers the full precision range as the tare operation is performed.
***ii** Repeatability can worsen depending on the environmental conditions and operator skills.
***iii** Pursuant to the United States Pharmacopeia (USP), Chapter 41
***iv** One additional unit from tael (Singapore/HK jewelry/Taiwan/China), tola or Newton can be added upon request.
***v** For the 0.001/0.01 g models of the FZ/FZ-WP series and the 0.001 g models of the FX/FX-WP series.

Dimensions (mm/inches)

0.0001 g models

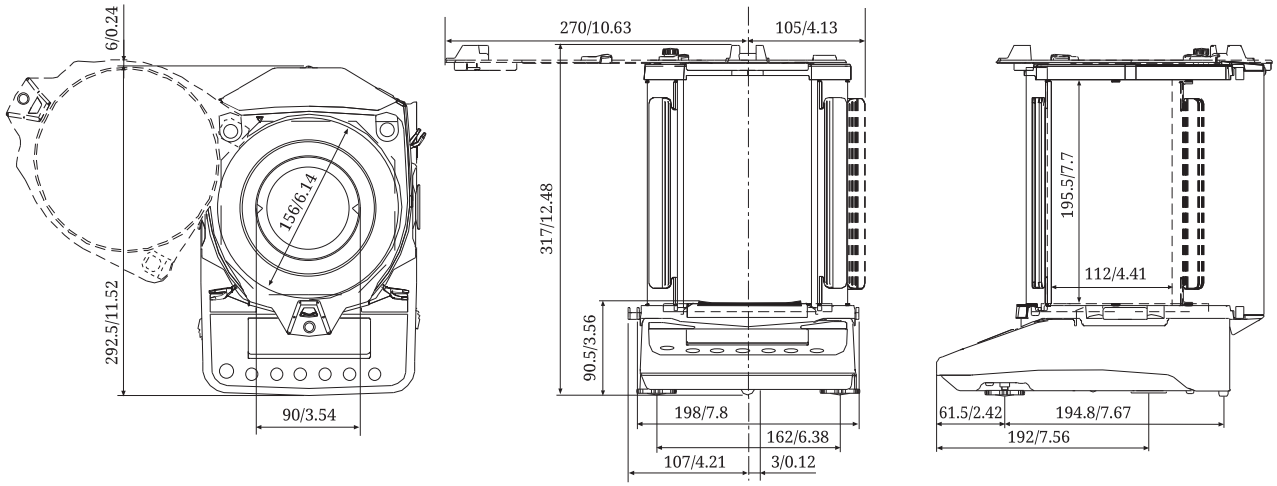

0.001 g models

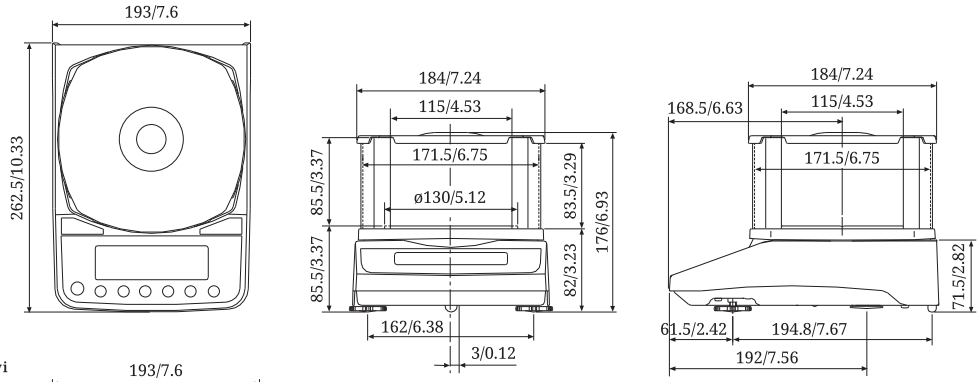

0.01 g models*vi

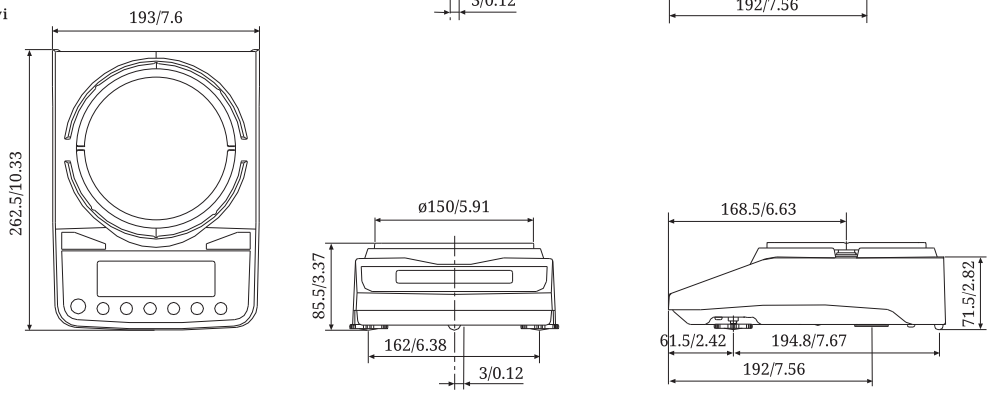

***vi** A small breeze break is provided as standard for the 0.01 g models of the FZ/FZ-WP series as well.

Internal Weight (FZ/FZ-WP) · IP65 (FZ-WP/FX-WP) · Compact Super Hybrid Sensor · Reverse Backlit LCD · RS-232C Interface · User Access Control · GLP Compliant · Date & Time (FZ/FZ-WP) · Impact Shock Detection · Counting with ACAI · Percentage Function

Animal Weighing · Statistical Calculation · Comparator Function · Auto Power ON · Auto Power OFF · Underhook

Optional

Bi-directional/ Quick USB · Ethernet (TCP/IP) Interface · Bluetooth® Interface · Rechargeable Battery

A&D Company, Ltd.

Discover Precision

A&D Company, Ltd. (JAPAN)
URL: aandd.jp

A&D Engineering, Inc. (USA)
URL: andonline.com

A&D Australasia Pty Ltd. (Australia)
URL: andaustralasia.com.au

A&D Instruments Ltd. (United Kingdom)
URL: andprecision.com

A&D Korea Ltd. (South Korea)
URL: andk.co.kr

A&D Rus Co., Ltd. (Russia)
URL: and-rus.ru

A&D Instruments India (P) Ltd. (India)
URL: aanddindia.in

A&D Scientech Taiwan Ltd. (Taiwan)
URL: aandd.com.tw

A&D Instruments Thailand Ltd. (Thailand)
URL: thai.andprecision.com

A&D Technology Trading (Shanghai) Co., Ltd. (China)
URL: aanddtech.cn